# Section 10
# Chapter 12

## 24 Valve, 8.3 Liter Engine

## Fuel System

Note: All coding used in the 8.3 Liter and 9 Liter engine manuals are Cummins engine codes. These engine codes have no meaning to New Holland warranty codes and should only be used for procedure steps.

# Fuel System

## Contents

**Engine Fuel Heater, Electric (005-008) ..... 7**
Initial Check (005-008-001) ..... 7
Remove (005-008-002) ..... 7

**Flow Diagram, Fuel System ..... 4**

**Fuel Flow (005-011) ..... 9**
Pressure Test (005-011-013) ..... 9

**Fuel Lift Pump (005-045) ..... 19**
Initial Check (005-045-001) ..... 19
Install (005-045-026) ..... 21
Remove (005-045-002) ..... 20
Test (005-045-012) ..... 20

**Fuel Pump (005-016) ..... 10**
Install (005-016-026) ..... 11
Remove (005-016-002) ..... 10

**Fuel Pump Accumulator (005-077) ..... 23**
Pressure Test (005-077-013) ..... 23

**Fuel Pump Accumulator Module (005-085) ..... 32**
Remove (005-085-002) ..... 32
Install (005-085-026) ..... 35

**Fuel Pump Cam Housing (005-080) ..... 25**
Inspect for Reuse (005-080-007) ..... 25

**Fuel Pump Cam Housing Module (005-088) ..... 43**
Remove (005-088-002) ..... 43
Install (005-088-026) ..... 45

**Fuel Pump Delivery Valve (005-020) ..... 14**
Leak Test (005-020-014) ..... 16
Inspect for Reuse (005-020-007) ..... 14
Install (005-020-026) ..... 15
Preparatory (005-020-000) ..... 14
Remove (005-020-002) ..... 14

**Fuel Pump Distributor Inlet Fitting (005-084) ..... 29**
Remove (005-084-002) ..... 29
Install (005-084-026) ..... 30

**Fuel Pump Distributor Module (005-086) ..... 37**
Remove (005-086-002) ..... 37
Install (005-086-026) ..... 38

**Fuel Pump Gear Pump (005-025) ..... 16**
Measure (005-025-010) ..... 16
Preparatory (005-025-000) ..... 16

**Fuel Pump Gear Pump Module (005-089) ..... 47**
Remove (005-089-002) ..... 47
Install (005-089-026) ..... 48

**Fuel Pump Injection Control Valve (005-087) ..... 42**

**Fuel Pump Rate Shape Tube (005-090) ..... 50**
Remove (005-090-002) ..... 50
Install (005-090-026) ..... 51

**Fuel Pump Timing (005-037) ..... 17**
Inspect for Reuse (005-037-007) ..... 18
Install (005-037-026) ..... 18
Remove (005-037-002) ..... 17

**Fuel System - General Information ..... 1**
General Information ..... 1

**Injection Control Valve (005-078) ..... 23**
Click Test (005-078-072) ..... 23

**Pumping Control Valve (005-079) ..... 24**
Click Test (005-079-072) ..... 24
Cutout Test (005-079-073) ..... 24

**Rotor, CAPS Fuel Injection Pump (005-072) ..... 22**
Inspect for Reuse ..... 22
Install (005-072-026) ..... 23
Leak Test (005-072-014) ..... 23
Preparatory (005-072-000) ..... 22
Remove (005-072-002) ..... 22

**Service Tools ..... 6**
Fuel System ..... 6

**Snubber, Rate Shape (005-081) ..... 25**
Inspect for Reuse (005-081-007) ..... 26
Install (005-081-026) ..... 27
Leak Test (005-081-014) ..... 26
Preparatory (005-081-000) ..... 25
Remove (005-081-002) ..... 26

**Specifications ..... 5**
Fuel System ..... 5

# Fuel System - General Information

## General Information

### CAPS Fuel Pump Familiarization

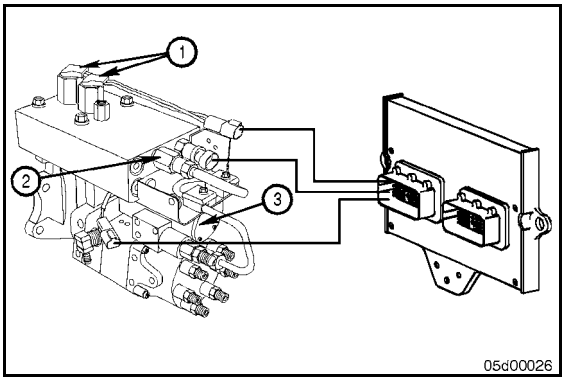


The CAPS fuel system is a distributor type injection system. CAPS stands for Cummins Accumulator Pump System. An accumulator is used to store pressurized fuel for the injection event. There are four components that provide or receive input to the electronic control module (ECM). There are two pumping control valves (1) which are controlled by the ECM. These valves control the pressure in the accumulator. The accumulator fuel pressure/temperature (2) sensor is located on the accumulator and provides the ECM with pressure and temperature information. The Injection Control Valve (3) is also controlled by the ECM and regulates fueling and timing.

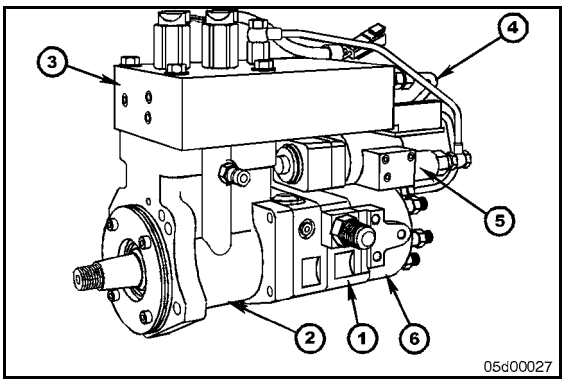


The CAPS injection pump can be divided into six distinct units/modules. They are the gear pump, cam and housing, accumulator/pumping plunger, rate shape tube, injection control valve (ICV), and distributor. Fuel flows through the modules in the following order;

1. gear pump
2. cam and housing
3. accumulator
4. rate shape tube
5. injector control valve (ICV)
6. distributor

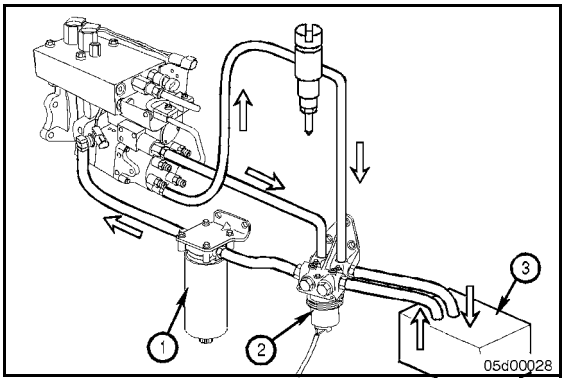


A lift pump is used for priming the pump at start up. The lift pump runs for approximately 30 seconds after key-on. Once the engine is started, the gear pump is able to maintain prime without any assistance from the lift pump.

1. fuel filter
2. lift pump
3. fuel tank

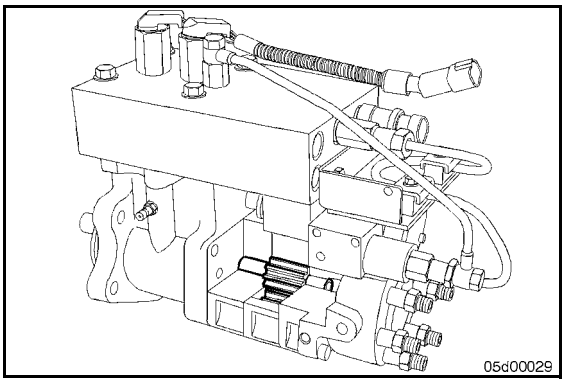


The gear pump supplies fuel to the pumping plungers through internal drillings in the cam housing. The gear pump also supplies fuel to the distributor for lubrication and injection line refill purposes. The gear pump is regulated to approximately 180 psi at 2400 engine rpm. The gear pump has an internal filter to catch any debris generated downstream of the main, external fuel filter. The pump camshaft is driven off the engine camshaft (just like the Bosch pump), therefore pump rpm is one-half engine rpm. The gear pump is driven by the pump camshaft via an internal coupling. The gear pump shaft drives the distributor rotor.

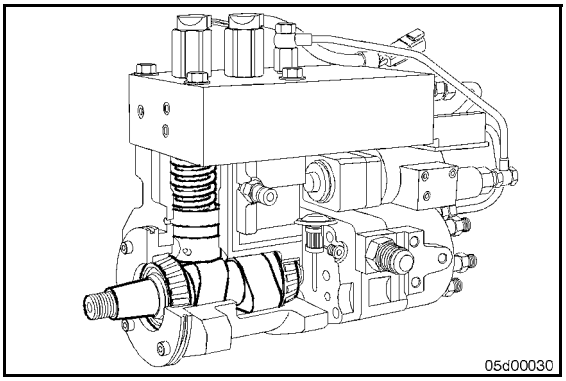


Each pumping plunger is driven by a two lobed camshaft with three lift profiles per lobe. The camshaft pump is located in the cam housing module. The bearings that support the camshaft as well as the tappets, rollers, and camshaft itself are lubricated with engine oil. These are the only components in the pump lubricated with engine oil.

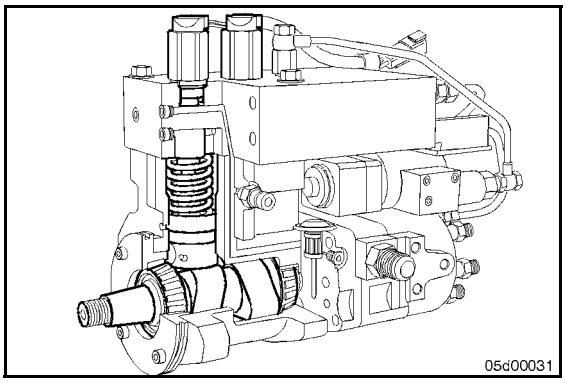


The volume above each pumping plunger is filled, by the gear pump, as the plungers travel downwards. A pumping control valve (PCV) is located above each pumping plunger. The supply fuel from the gear pump flows around the plunger of this normally open valve into the chamber above the plunger. As the plunger starts to move upwards the fuel is pushed backwards into the gear pump. The time at which the pumping control valve is energized (closed) is based on engine speed, accumulator pressure, and throttle position. When the pumping control valve closes, the fuel is pushed into the accumulator and then held by check valves. A zero to 24000 psi pressure sensor is located in the accumulator. The pressure sensor provides direct feed back to the ECM, so the desired accumulator pressure is maintained. This pressure sensor also has temperature sensing capabilities built into it. Fuel moves from the accumulator to the distributor via the rate shape tube.

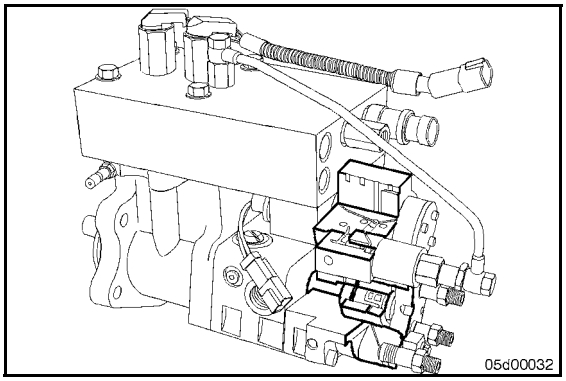


Fuel is delivered to the injection control valve (ICV) by the rate shape tube through a drilling in the distributor. The ICV controls both fueling and timing. The injection control valve contains an inner pin and outer valve. The outer valve is fastened to an armature which is driven by the magnetic force of an ECM controlled stator. The inner pin is driven by two methods, spring force and fuel pressure. When the two pins are in the closed position no fuel flows through the control valve. When the stator is energized the outer valve is drawn towards the stator. The inner pin is forced to travel with the outer pin by a spring. The inner pin only travels about half the distance the outer pin does and comes to rest against a stop. Once the two pins separate fuel can flow to drain or to the injectors. The pressure of this fuel forces the inner pin to move back to the starting position. When the outer pin seats against its seat the flow path to the drain is closed and fuel is directed to the injector through the distributor. The injection control valve goes through this process once for each injection event.

The distributor directs the fuel to the correct injector. The drain fuel from the ICV is routed through the ICV pressure regulator and is returned to the tank.

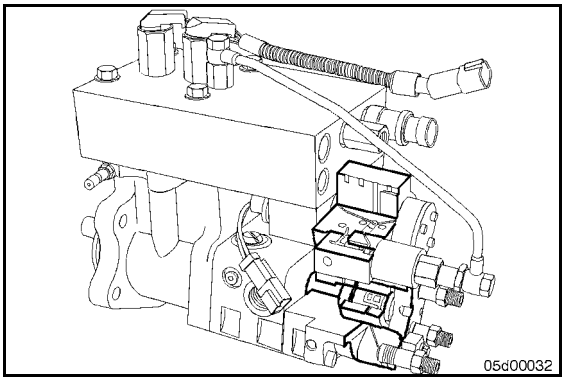

# Flow Diagram, Fuel System

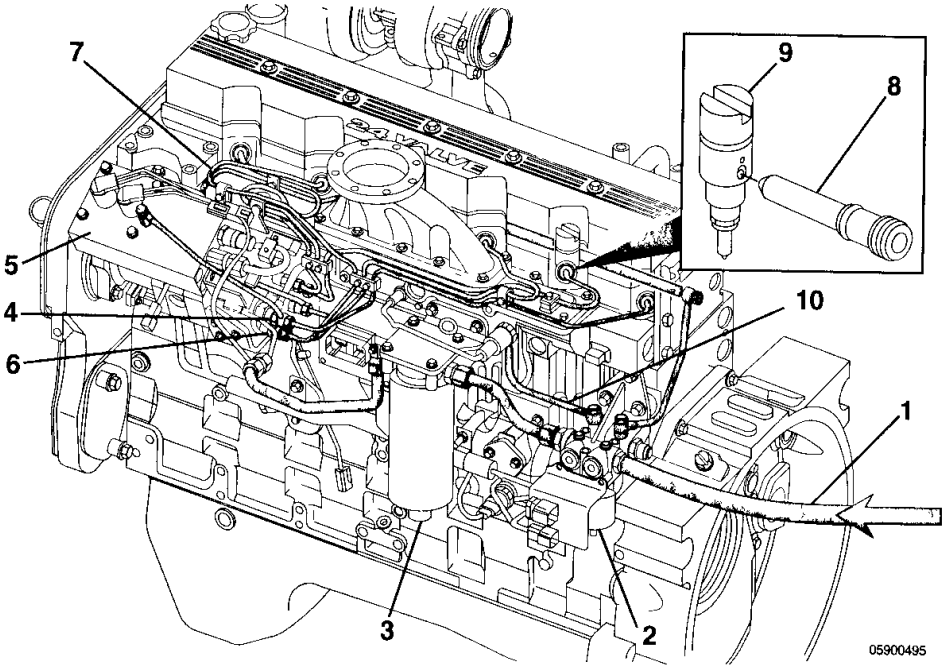


**CAPS P11 Subsystems**

1. Fuel from Supply Tank
2. Electronic Lift Pump
3. Fuel Filter and Water Separator
4. Fuel Drain Line
5. CAPS Injection Pump
6. Distributor Outlet Fitting
7. High Pressure Supply Lines
8. Fuel Connector
9. Injectors
10. Fuel Return to Supply Tank

# Specifications

## Fuel System

Engine Idle Speed ..... 850 to 950 rpm

Minimum Lift Pump Inlet Pressure at Rated (vacuum) ..... 102 mm Hg [4 in Hg]

Maximum Fuel Filter Outlet Pressure at Rated (vacuum) ..... 102 mm Hg [4 in Hg]

Minimum Fuel Filter inlet Pressure during Cranking ..... 102 mm Hg [4 in Hg]

Fuel Drain Line Maximum Pressure ..... 254 mm Hg [10 in Hg]

Fuel Inlet Maximum Temperature ..... 71°C [160°F]

Engine Minimum Cranking Speed ..... 150 rpm

# Service Tools

## Fuel System

The following special tools are recommended to perform procedures in this section. The use of these tools is shown in the appropriate procedure.

| Tool No. | Tool Description | Tool Illustration |
|---|---|---|
| **CNH299110** | **Fuel Pump Gear Puller**<br><br>Used to pull the fuel pump gear. | 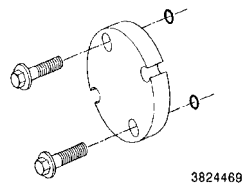 |

# Engine Fuel Heater, Electric (005-008)

## Initial Check (005-008-001)

**NOTE:** The fuel heater is not controlled by the electronic control module (ECM). A bimetallic strip on the filter head acts as a thermostat. The fuel heater will turn on at approximately 1°C [34°F] and turn off at approximately 18°C [65°F].

Remove the 2-pin connector from the fuel heater.

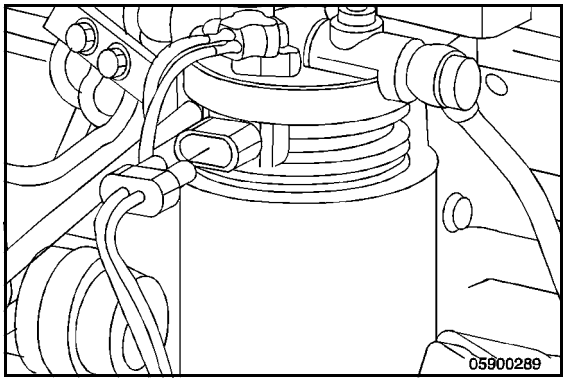


Check for proper voltage to the fuel heater.

**NOTE:** Minimum voltage is 12 volts.

If the voltage is **not** within specifications, refer to the vehicle troubleshooting and repair manual.

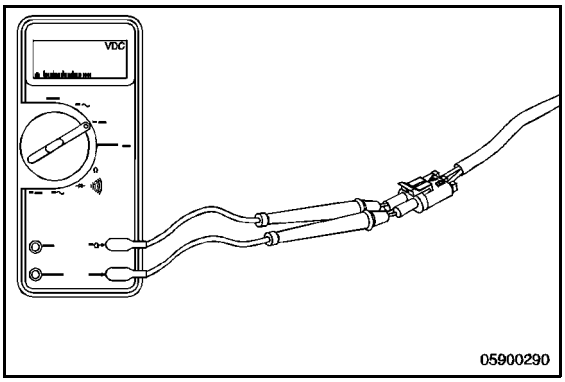


## Remove (005-008-002)

Disconnect the connector from the fuel heater.

Disconnect the connector from the water-in-fuel (WIF) sensor if equipped.

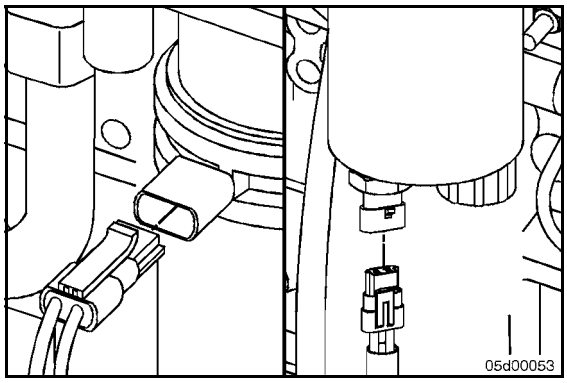


Turn the fuel drain valve for approximately 5 seconds to reduce fuel spillage during filter removal.

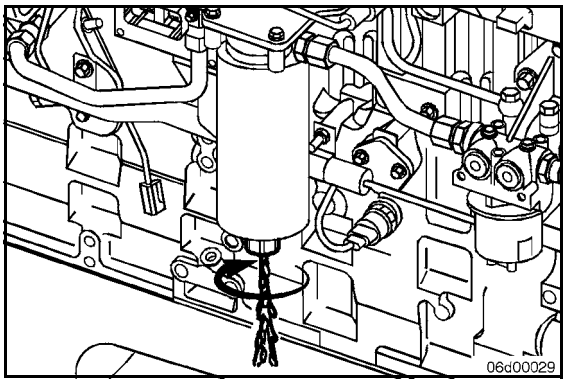

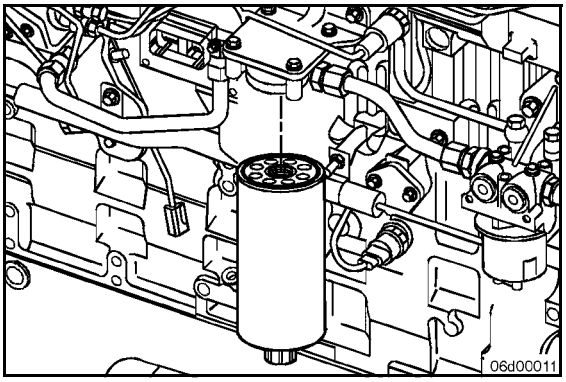


Remove the fuel filter.

Remove the fuel filter stud.

Remove the fuel heater from the filter head. The heater should be able to be pulled off the filter head.

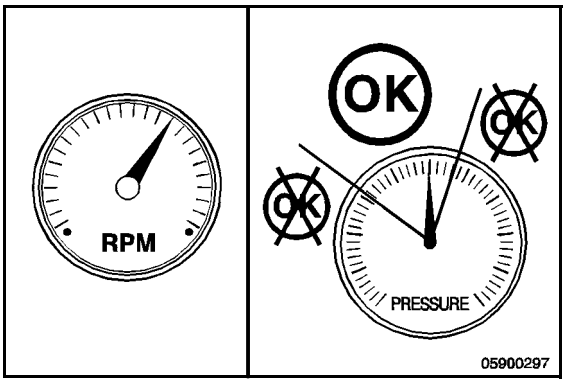


If the maximum fuel pressure drop across the fuel filter is greater than 0.725 kPa [5 psi], replace the fuel filter. Refer to Procedure 006-015.

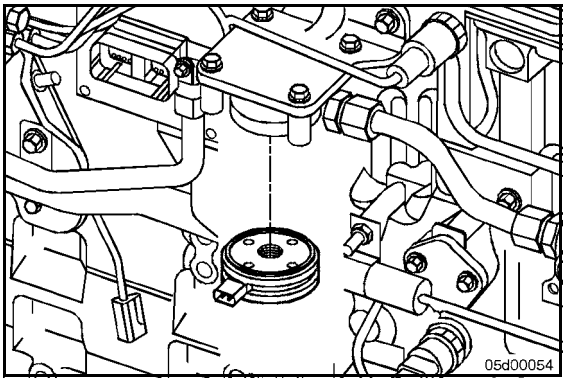


## Install (005-008-026)

Install gasket on fuel heater.

Place the fuel heater, gasket side facing up, against the filter head.

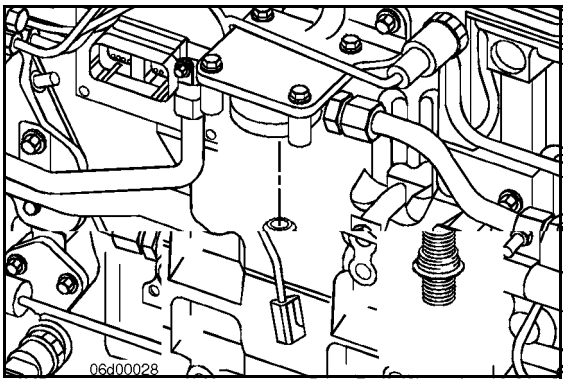


Apply Loctite® to the filter stud.

Install the fuel filter stud.

**Torque Value:** 41 N•m [30 ft-lb]

Install the fuel filter.

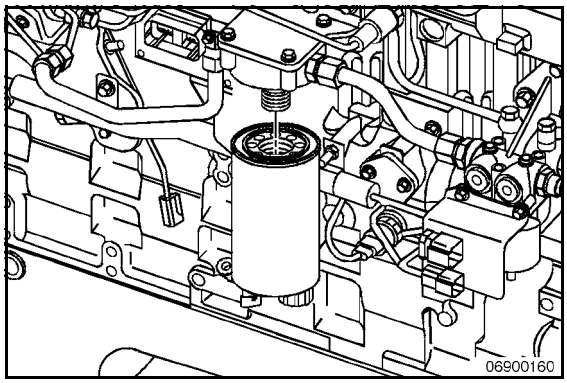


Connect fuel heater.

Connect water-in-fuel (WIF) sensor if equipped.

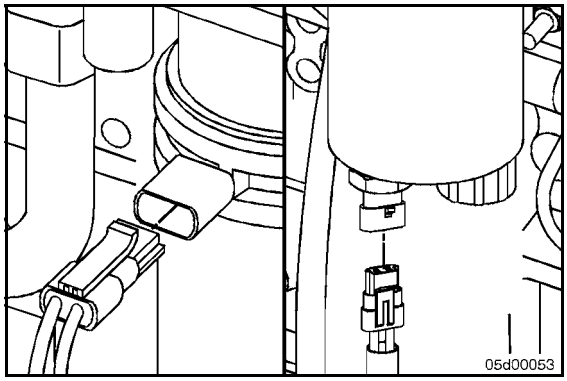


# Fuel Flow (005-011)

## Pressure Test (005-011-013)

Remove the plug from the inlet and outlet side of the fuel filter head.

Install two 10 mm [0.39 in] Compucheck fittings and a pressure gauge that has a range of at least zero to 2.90 kPa [zero to 20 psi].

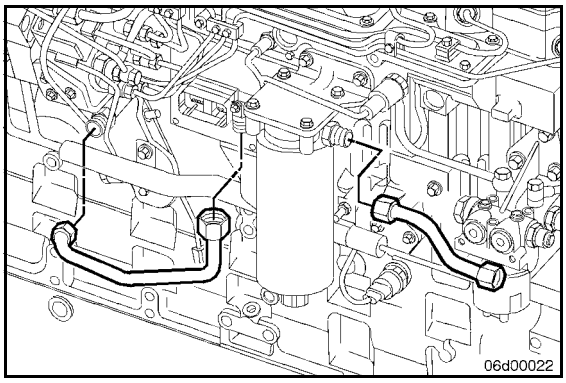


Run the engine loaded at rated conditions. Fuel supply restriction should read as follows:

Pressure drop across the fuel filter should equal 0.725 kPa [5 psi] maximum. Outlet side of the filter should equal 2.96 kPa [10 psi] minimum with the keyswitch in the ON position.

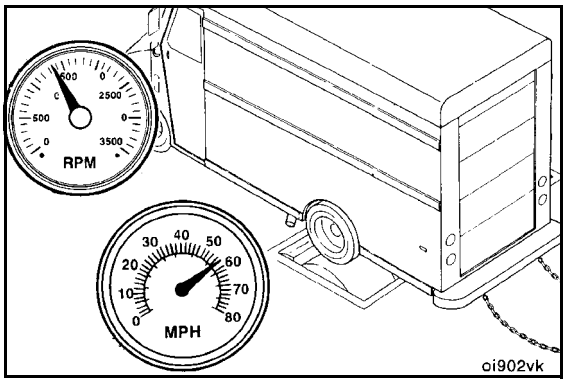

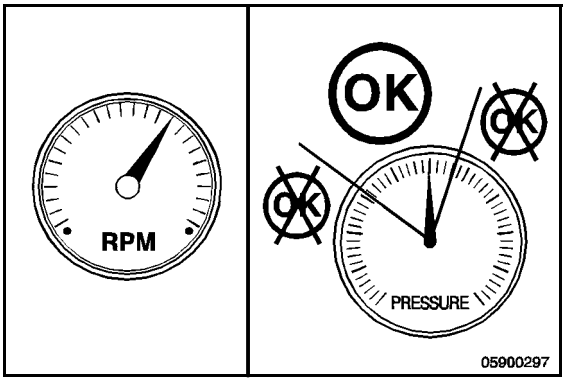


If the maximum fuel pressure drop across the fuel filter is greater than 0.725 kPa [5 psi], replace the fuel filter. Refer to Procedure 006-015.

If the restriction is too high, the supply lines from the fuel supply tank need to be checked. Refer to Procedure 006-020.

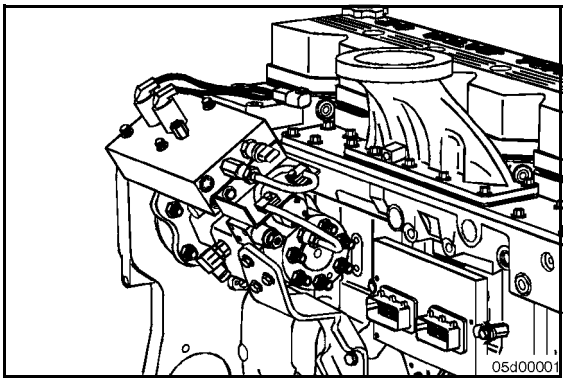


# Fuel Pump (005-016)

## Remove (005-016-002)

- Disconnect the injection pump supply line. Refer to Procedure 006-024.
- Remove the injector supply lines. Refer to Procedure 006-051.
- Disconnect the tank return line. Refer to Procedure 006-013.
- Disconnect the pumping control valve 4-pin Deutsch connector.
- Disconnect the injection control valve 4-pin Deutsch connector.
- Disconnect the accumulator pressure/temperature sensor.

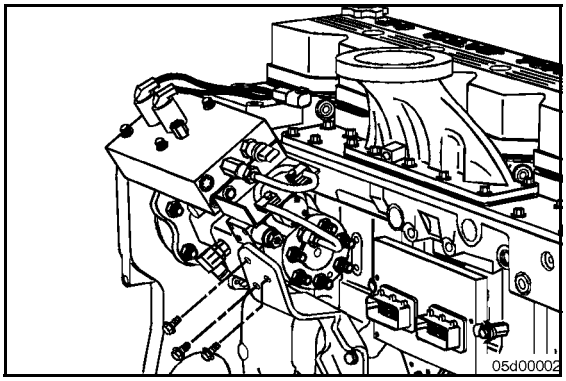


Remove the injection pump upper support bracket.

Remove the injection pump tail support bracket.

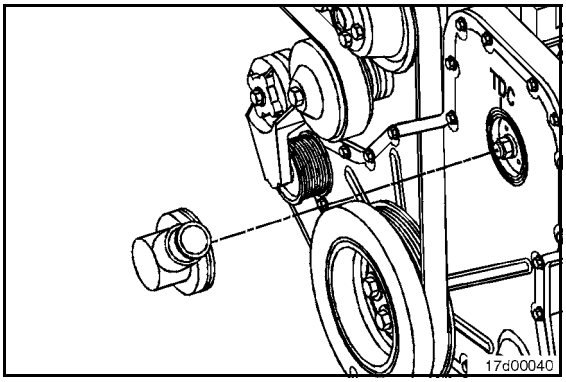


Remove the access cap and gear retaining nut and washer.

Locate TDC for cylinder No. 1 by barring engine slowly until the line on the pump gear lines up with the line on the gear cover.

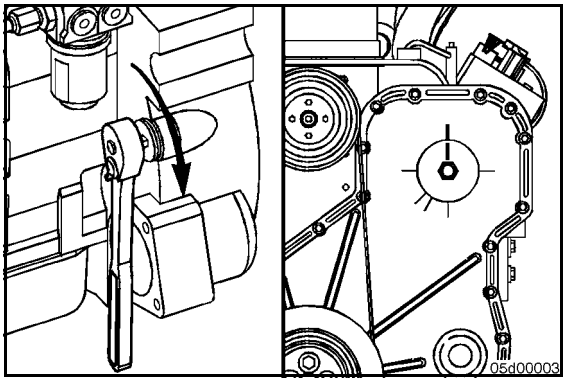


Use Tool No. CNH299110, and pull the fuel injection pump drive gear loose from the pump drive shaft.

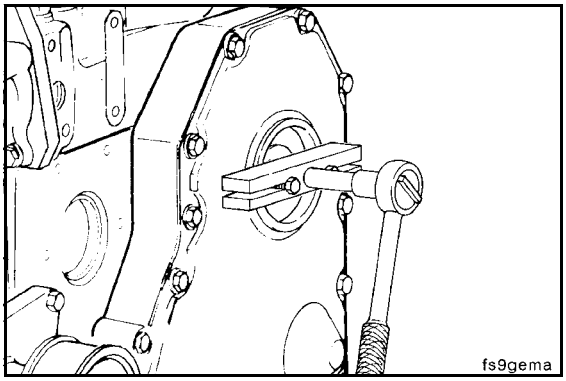


Remove the four mounting nuts. Remove the fuel injection pump.

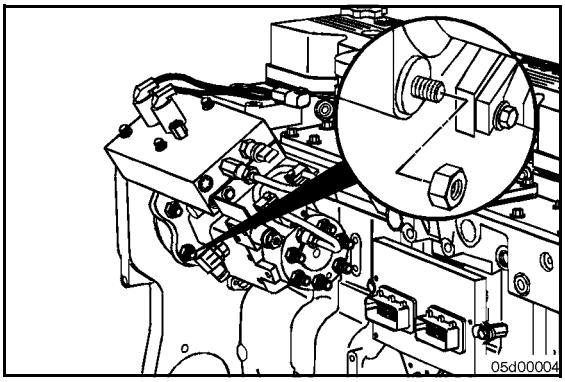


## Install (005-016-026)

Make sure the engine has No. 1 cylinder at TDC.

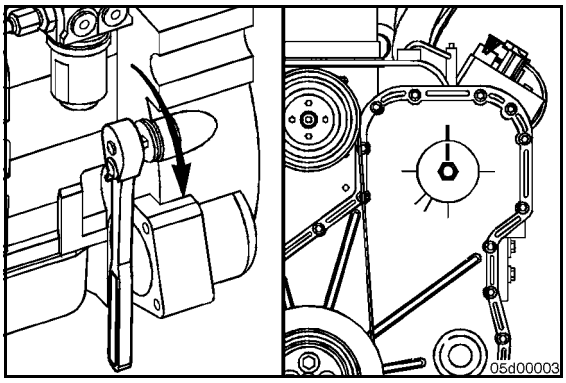

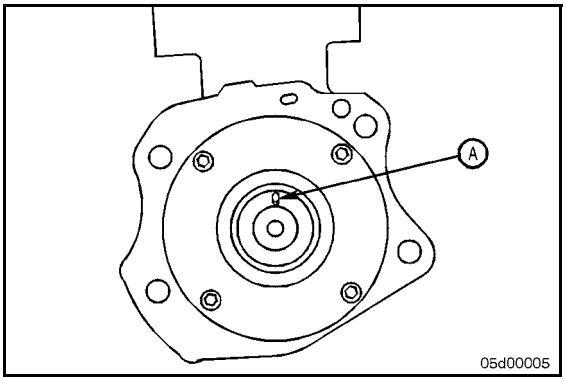


Make sure the fuel injection pump is at its TDC position.

The fuel injection pump is at No. 1 cylinder TDC when the dowel pin in the shaft (A) is perpendicular to the top of the accumulator.

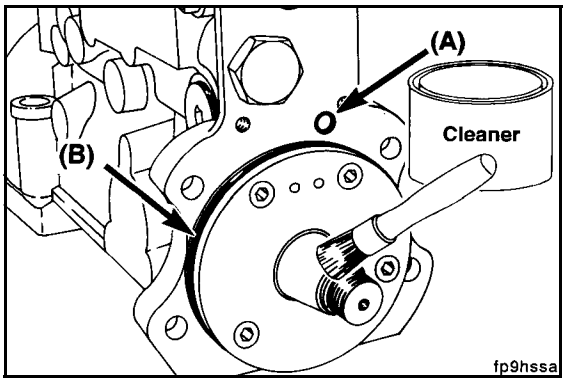


Make sure the o-ring seals for the fill orifice (A) and pilot (B) are correctly installed and are not damaged.

Lubricate the mounting flange with cleaner.

The fuel pump drive gear inside diameter and the shaft outside diameter **must** be clean and dry before installing the gear.

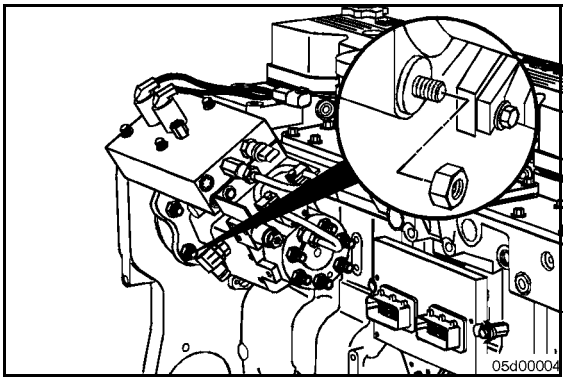


Slide the fuel injection pump shaft through the drive gear and position the fuel injection pump flange onto the mounting studs.

Make sure the dowel pin lines up with the keyway in the fuel injection pump gear.

Make sure the dowel pin in the fuel injection pump flange lines up with the hole in the gear housing.

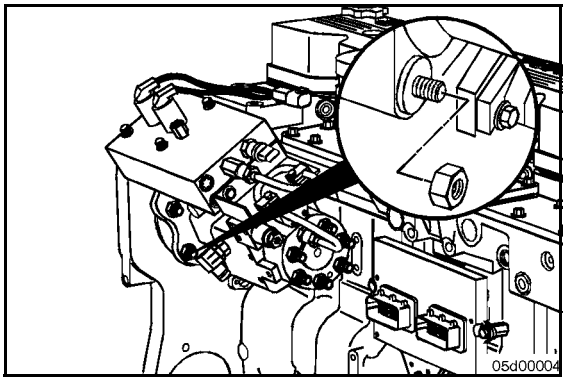


Install the mounting nuts.

Install the fuel injection pump upper support bracket.

Install the fuel injection pump tail support bracket.

**Torque Value:**

| | | |
|---|---|---|
| Fuel Pump Mounting Nuts | 44 N•m | [32 ft-lb] |
| Fuel Pump Support Brackets | 44 N•m | [32 ft-lb] |

**Thanks very much for your reading,**

**Want to get more information,**

**Please click here, Then get the complete manual**

JustClickHere

**NOTE:**

**If there is no response to click on the link above, please download the PDF document first, and then click on it.**

**Have any questions please write to me:**
**admin@servicemanualperfect.com**